OWNER'S MANUAL

Assembly & Operating Instructions

BBT 21" ELECTRIC START B&S MULTI SPEED SELF PROPELLED LAWN MOWER

MODEL NO. BBT-LM-BSES-SP-4S

N23701

To the Owner

Thank you for purchasing our BBT 21" Electric Start B&S Multi Speed Self Propelled Lawn Mower. It was carefully engineered to provide excellent performance when properly operated and maintained.

Please read this entire manual prior to operating the Lawn Mower. It instructs you how to safely and easily set up, operate and maintain your Lawn Mower. Please be sure that you and any other persons who will operate the Lawn Mower carefully follow the recommended safety practices at all times. Failure to do so could result in personal injury or property damage.

All information in this manual is relative to the most recent product information available at the time of printing. Review this manual frequently to familiarise yourself with the machine, its features and operation. Please be aware that this Owner's Manual may cover a range of product specifications for various models. Characteristics and features discussed and/or illustrated in this manual may not be applicable to all models. We reserve the right to change product specifications, designs and equipment without notice and without incurring obligation.

All the power testing information used to establish the power rating of the engine equipped on this Lawn Mower can be found in the engine manufacturer's manual or website. If you have any problems or questions concerning the machine, please contact our Customer Support Department.

Throughout this manual, all references to right and left side of the Lawn Mower are observed from the operating position. The engine manufacturer is responsible for all engine-related issues with regards to performance, power-rating, specifications, warranty and service. Please refer to the engine manufacturer's Owner's Manual packed separately with your Lawn Mower for more information.

Customer Support

Please do NOT return the Lawn Mower without first contacting the Customer Support Department at bbt@bbta.com.au.

If you have difficulty assembling this product or have any questions regarding the controls, operation, or maintenance of this Lawn Mower, please contact our Customer Support Department.

SAVE THESE INSTRUCTIONS

TABLE OF CONTENTS

Page(s)

To the Owner 2

Customer Support 2

TABLE OF CONTENTS 3

IMPORTANT SAFETY INFORMATION 4-5

Additional Information and Potential Changes 4

Key to Symbols 5

GENERAL SAFETY RULES 6-7

General Conditions of Use 6

General Safety Rules 6

Spark Plug Safety Rules 6

Fire and Burn Hazards 7

ASSEMBLING 8-11

BEFORE OPERATIONS 12-13

Engine Oil 12

Fuel 12

Charging The Battery 13

Cutting Height Adjustment 13

OPERATIONS 14-15

Starting The Engine 14

Operating the Controls for Mowing 15

OPERATIONS 16

MAINTENANCE 17-19

Maintenance and Storage 17

Blade 17

Grass Bag Cleaning and Replacement 18

Engine Maintenance 18

Maintenance Schedule 19

TROUBLESHOOTING 19

STORAGE 20

SPECIFICATIONS 20

WARRANTY & SERVICE 21

EXPLODED DIAGRAM & PARTS LIST 22-25

YOU MAY ALSO LIKE 26

IMPORTANT SAFETY INFORMATION

<u>WARNING:</u> Read and thoroughly understand all instructions in this manual and on the safety decals before assembling or operating this Lawn Mower. Failure to do so may cause serious injury or death. Do not allow anyone to operate this Lawn Mower who has not read this manual. As with all power equipment, a Lawn Mower can be dangerous if assembled or used improperly. Do not operate this Lawn Mower if you have any questions concerning its safe operation. To get answers to any questions, call our Customer Support Department.

This SAFETY ALERT SYMBOL identifies important safety messages in this manual. Failure to follow this important safety information may result in serious injury or death.

DANGER! This Lawn Mower was built to be operated according to the safe operation practices in this manual. As with any type of power equipment, carelessness or error on the part of the operator can result in serious injury. This Lawn Mower is capable of amputating hands and feet and throwing debris. Failure to observe the following safety instructions could result in serious injury or death.

DANGER The following signals, words and meanings are intended to explain the levels of risk associated with this product.

WARNING **DANGER indicates a hazardous situation which, if not avoided, will result in serious injury or death.**

CAUTION **WARNING indicates a hazardous situation which, if not avoided, could result in serious injury or death.**

NOTICE **CAUTION indicates a hazardous situation which, if not avoided, could result in minor or moderate injury.**

NOTICE is important information about the proper use of your Lawn Mower. Failure to follow this instruction could result in damage to your Lawn Mower or property.

Additional Information and Potential Changes

We reserve the right to discontinue, change, and improve our products at any time without notice or obligation to the purchaser. The descriptions and sections contained in this manual were in effect at the time of printing. Equipment described within this manual may be optional. Some illustrations may not be applicable to your machine.

WARNING! Your Responsibility—Restrict the use of this power machine to persons who have read, understood and will follow the warnings and instructions in this manual and on the machine.

SAVE THESE INSTRUCTIONS!

IMPORTANT SAFETY INFORMATION

Key to Symbols

Symbol	Description
	READ THE OWNER'S MANUAL(S) Read, understand and follow all instructions in the manual(s) before attempting to assemble and operate.
	FACE PROTECTION Always wear safety goggles or safety glasses with side shields or a face shield when operating this product as well as ear protection.
	WEAR GLOVES Always wear non-slip, heavy-duty protective gloves when operating this product.
	WEAR SAFETY FOOTWEAR Always wear non-slip steel-toed safety footwear when operating this product.
	BEWARE OF FLYING OBJECTS Beware of thrown objects which can ricochet causing serious injury to the eyes. Always wear eye & ear protection when operating.
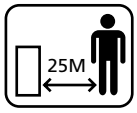	**BYSTANDERS** Keep bystanders, helpers, pets, and children at least 25 metres from the machine while it is in operation. Stop machine if anyone enters the area.
	TOXIC FUMES Breathing exhaust fumes can cause loss of consciousness and may lead to death. **DO NOT** operate the machine in an enclosed space.
	PETROL IS FLAMMABLE Petrol is extremely flammable. Allow the engine to cool for at least ten minutes before refuelling.
	DANGER! Keep your hands and feet away from the cutting element!
	Remove the spark plug before carrying out repairs or maintenance.
	CAUTION! Tool surfaces can be hot.
	DO NOT use in the rain.
	Blades continue to rotate after the engine stops. Rotating blades are capable of amputating hands and feet and throwing objects.

GENERAL SAFETY RULES

General Conditions of Use

- This machine is to be used exclusively for cutting natural grass. **NEVER** use the Lawn Mower for any other purposes. Any other utilization can involve danger to your safety and can involve damage to the Lawn Mower.
- People under 16 years and people who are not familiar with the Owner's Manual must not use the Lawn Mower.
- The user is responsible of the safety of other people in the working area. Keep children and animals at a safe distance while the Lawn Mower is in use.
- Before mowing, remove all foreign objects from the lawn which may be thrown by the machine, stay alert for any foreign object which may have been missed.

General Safety Rules

- Check that all nuts, bolts and screws are well tightened.
- Before mowing, place the grass catcher in its position.
- Before mowing, make sure that the blade and the blade fixing screw are securely fastened. When cutting edges, blades may require re sharpening, this must be done evenly on both sides, in order to prevent any imbalance. If the blade is damaged, it must be replaced.
- When mowing, always wear long trousers and protective footwear.
- **NEVER** run the engine in an enclosed and/or poorly ventilated area, engine exhaust contains carbon monoxide, a colourless and odourless gas. Breathing exhaust fumes can cause loss of consciousness and may lead to death.
- Work only when there is sufficient light.
- **DO NOT** use your Lawn Mower when it is raining or when the grass is wet.
- Particular precautions must be taken while mowing on slopes or downing stretches. Mow across the face of slopes, **NEVER** down or up.
- Turn off the engine if you must leave the Lawn Mower unattended, displace the Lawn Mower or incline it.
- **NEVER** lift the rear of the Lawn Mower while starting the engine and **NEVER** place your hands and feet underneath the deck or into the rear discharge chute while the engine is running.
- **NEVER** change in any way the rated speed of the engine.
- **NEVER** lift or carry the Lawn Mower while the engine is running.
- Disconnect the self-propelled system before starting the engine.

Spark Plug Safety Rules

- Stop the engine and remove the spark plug cover in these cases:
  - » before any operation under the deck or near the grass rear discharge chute.
  - » before any maintenance, repairing or checking operations.
  - » before carrying, lifting or removing the Lawn Mower.
  - » if you leave the Lawn Mower unattended or changing the cutting height.
  - » to remove and emptying the grass catcher.

⚠ WARNING

After you have stopped the engine, the blade is still in motion for a few seconds. Wait till blades have come to a complete stop.

» after hitting a foreign object, stop the engine and check thoroughly the Lawn Mower in order to see there is damage. Take the Lawn Mower to an authorized service station to do the repairing if necessary.

- If the Lawn Mower vibrates in an abnormal way, try to find the reasons why, or take your Lawn Mower to an authorized service station.
- Check all nuts, bolts and screws are tight to be sure the equipment is in a safe working condition.

Fire and Burn Hazards

- Always store petrol in an approved, tightly sealed container. Store container in a cool, dry place.
- Always fill up the tank with a funnel, always fill up your fuel tank outside. **DO NOT** smoke. **DO NOT** use mobile phone.
- Fill up with petrol and oil before starting the engine. **NEVER** open the cap of the fuel tank to add petrol while the engine is running or still hot.
- **DO NOT** start the engine if there is spilt petrol, wipe it off the engine and equipment, and move the Lawn Mower to another area, wait 5 minutes before starting the engine.
- Close tightly the fuel tank cap.

ASSEMBLING

Unpacking

Remove Lawn Mower from carton and check thoroughly for additional loose parts.

Handle Setup and Height Adjustment

Open out the handle and screw the handle parts with the four screws and knobs. Put the recoil starter on the right of the handle and fix the cable with the plastic collar.

Introduce the rope of the recoil starter handle on its support guide rope.

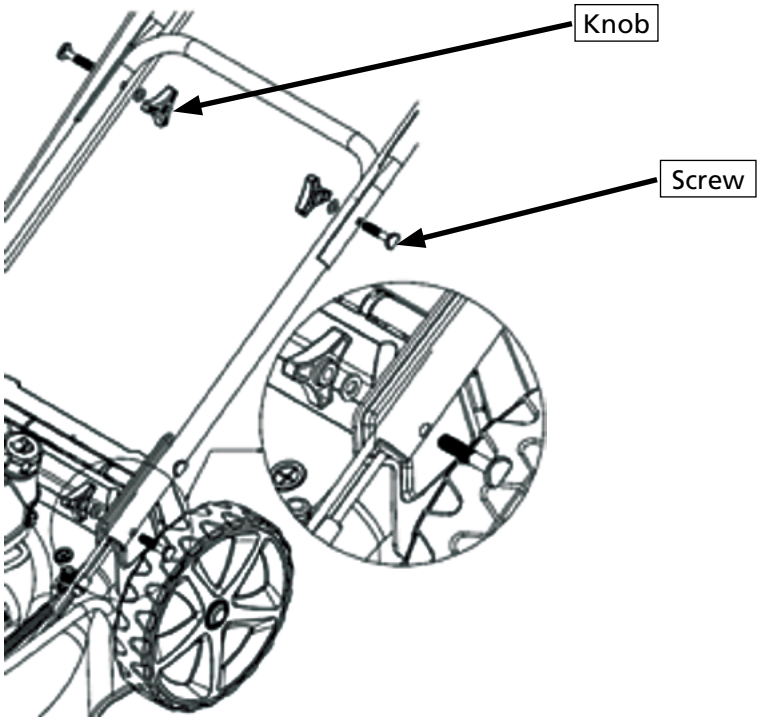

If you want to adjust height of the handle bar, you can select “L” or “H” two holes in left outer side bracket to fix the handle bar with screws and knobs.

The “H” hole is high position of the handle bar, and the “L” hole is low position of the handle bar.

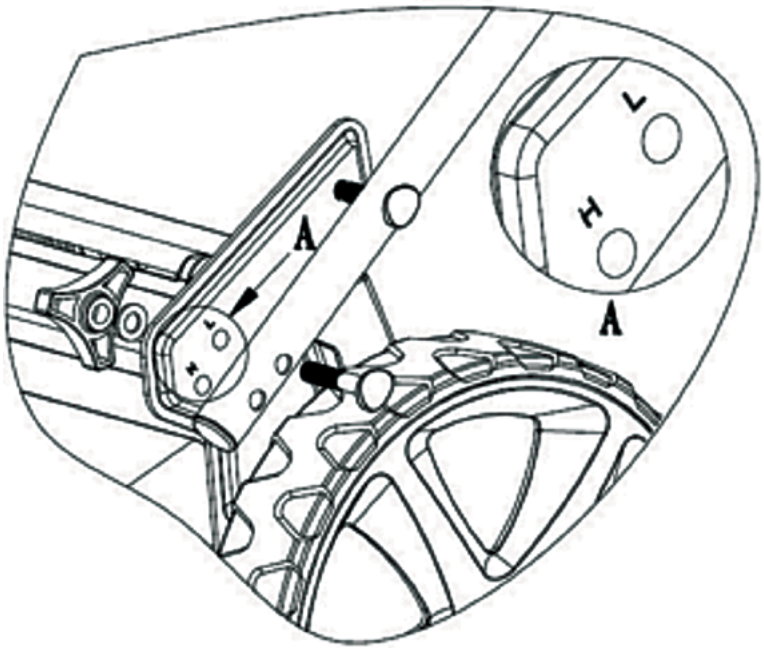

ASSEMBLING

Brake Cable Setup

Put the brake cable and clutch cable through to the hole of brake and clutch lever. (see the arrow mark)

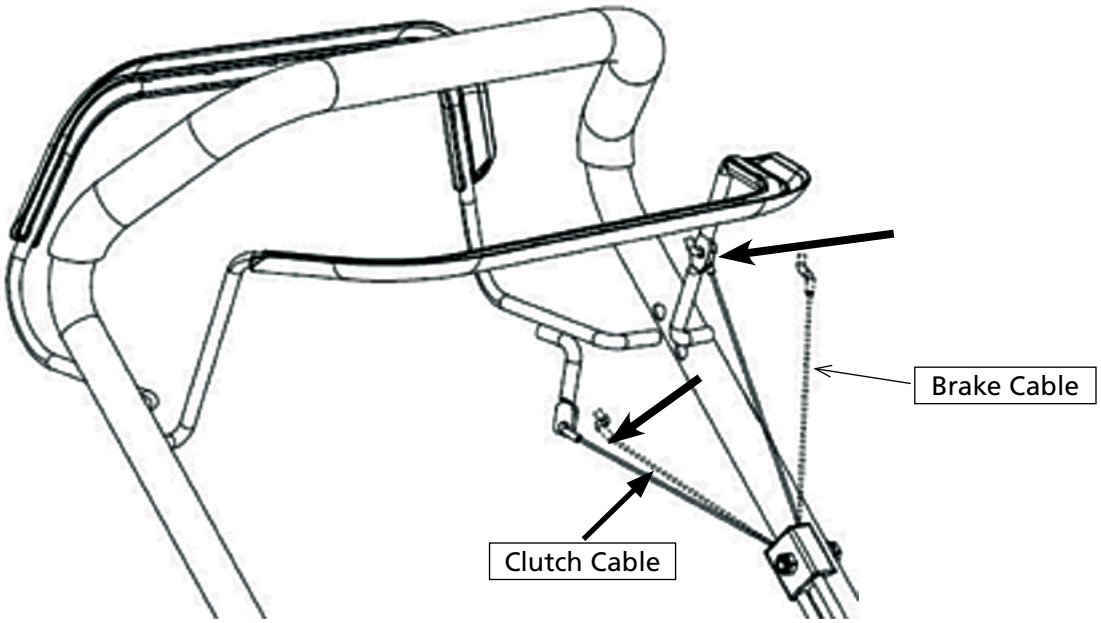

Panel Setup

Take out panel and two screws in a bag from carton, and fix the panel with screws.

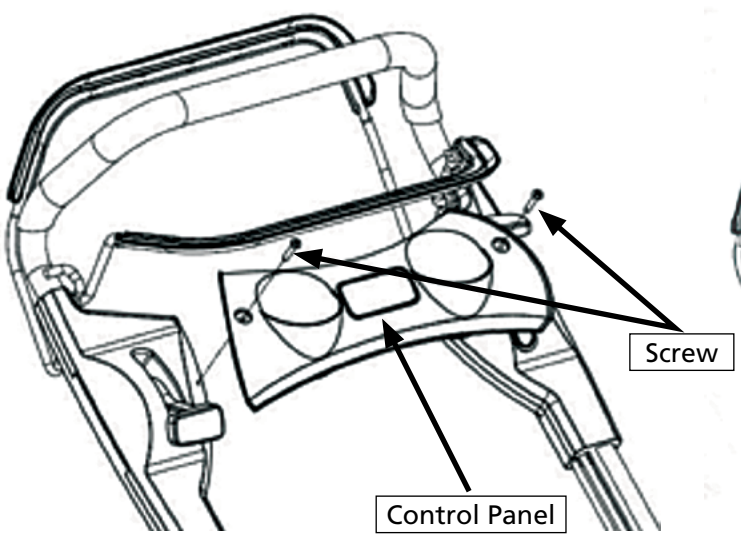

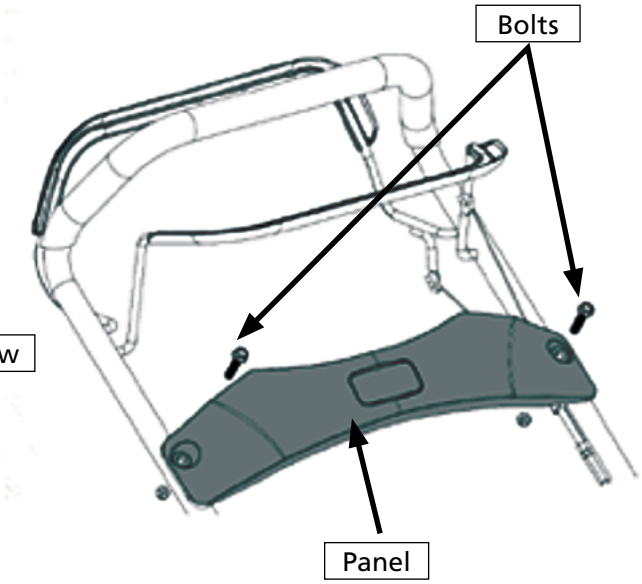

* Note: Not all models have middle Panel.

ASSEMBLING

Grass Catcher Assembly

- Slide the frame of the grass catcher into the grass bag and attach the clips as shown.
- Lift the rear discharge guard, remove the mulching plug, and install the grass bag.

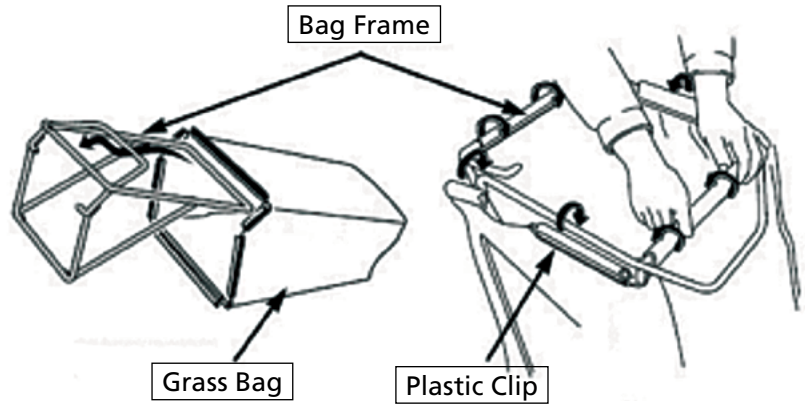

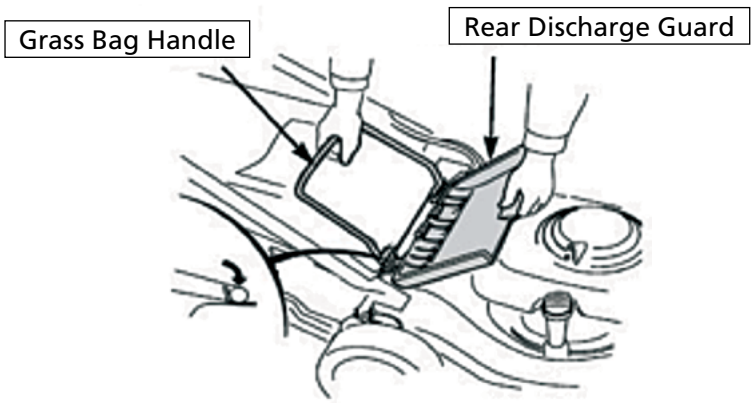

Mulching plug

- The mulching plug helps to curve the inside of the Lawn Mower deck for more efficient mulching.
- Install and remove the mulching plug by raising the rear discharge guard as shown.
- The mulching plug only fits one way.
- Remove the mulching plug when using the grass catcher.

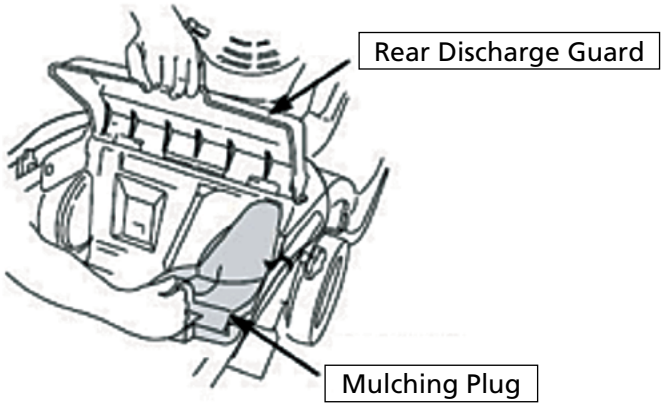

ASSEMBLING

Rear Discharge Guard Props

Take out the two supports in the bag from carton, lift the rear discharge guard, and install the two supports which can hold the rear discharge guard. This will discharge grass out more efficiently from the deck.

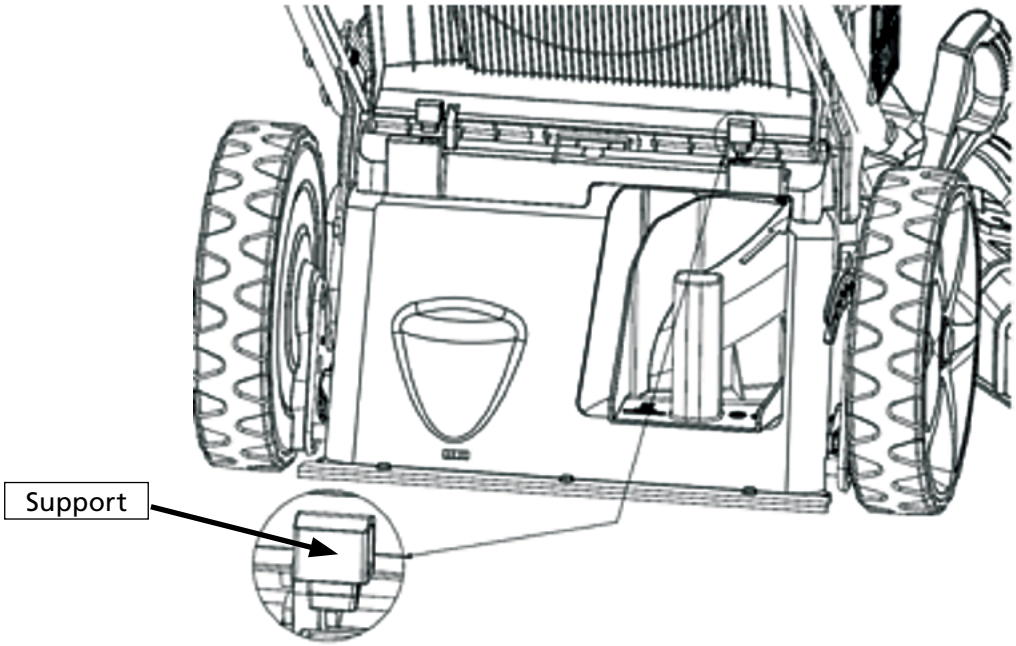

Side Discharge Cover Assembly

Lift the side discharge guard, install the side discharge cover.

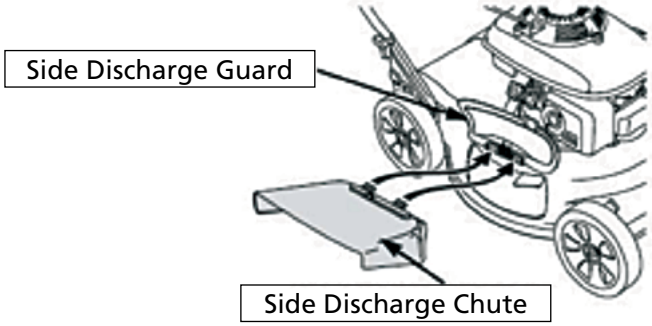

Only Mulching: please remove the side discharge cover.

*Note: Not all models do have side discharge guard

BEFORE OPERATIONS

Engine Oil

The Lawn Mower is shipped without oil in the engine.

All engines are run at the factory prior to packaging. Most of the oil is removed prior to shipment; however, some oil remains in the engine.

Add enough oil to bring the oil level between the upper and lower limit marks on the dipstick as shown. **DO NOT** overfill engine with oil.

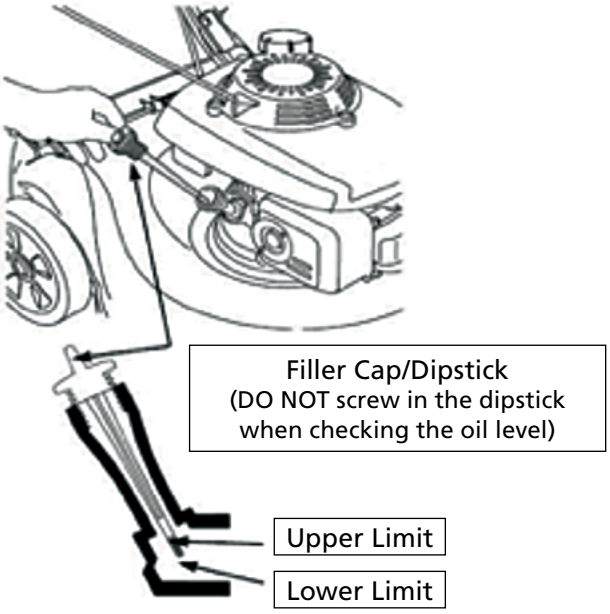

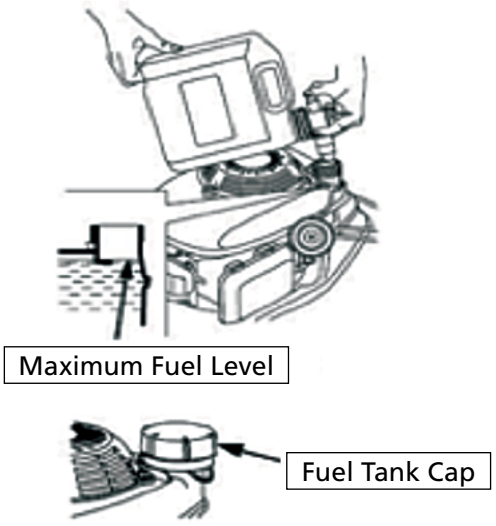

Fuel

NOTICE **Engine is delivered without fuel, refuel with 1.0 litre of petrol before starting the engine.**

- Remove the filler cap
- Add fuel to the bottom of the fuel level limit in the neck of the fuel tank. **DO NOT** overfill. Wipe up spilled fuel before starting the engine.
- Tighten the fuel tank cap

⚠ WARNING

Petrol is extremely flammable, and fuel vapour can explode, causing serious injury or death. Use extreme care when handling fuel. Keep out of reach of children.

Refuel in a well-ventilated area with the engine stopped. **DO NOT** smoke or allow flames or sparks in the area where the engine is refuelled or where petrol is stored. Avoid repeated or prolonged contact with skin or breathing of vapour.

After refuelling, tighten the fuel tank cap securely. If any fuel was spilled, make sure the area is dry before starting the engine.

BEFORE OPERATIONS

Charging The Battery

Charge the battery before use. Before the electric start function is used, the battery must be charged for five hours. Put the charger plug into the hole in the battery and connect the charger to a power supply.

* Note: Not all models have Electric Start Function.

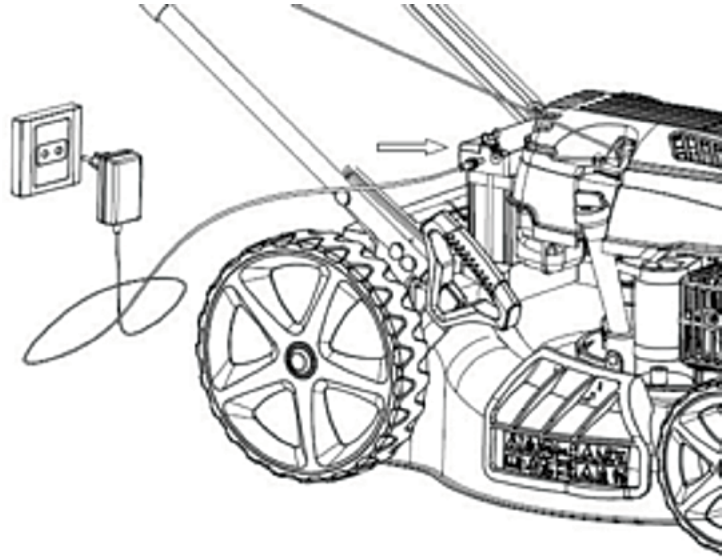

Cutting Height Adjustment

Check the cutting height settings, and make any necessary adjustments.

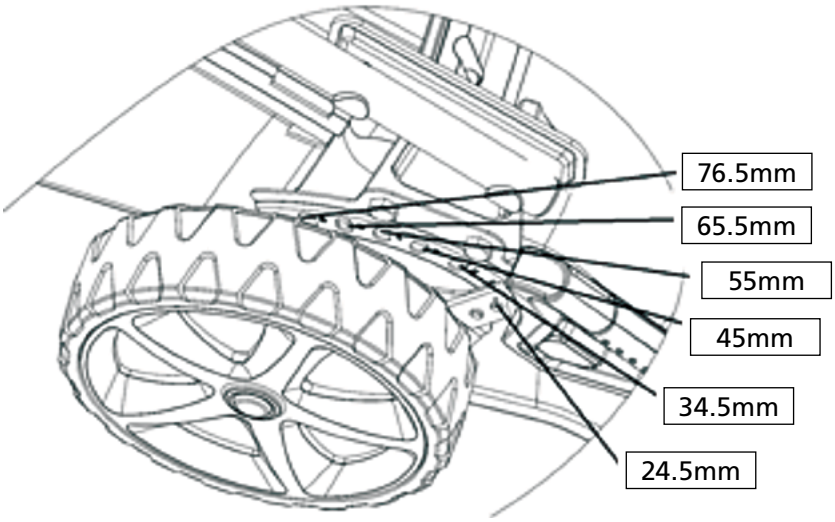

⚠ WARNING

The blade can cause serious injury. Stop the engine before adjusting the cutting height.

OPERATIONS

Starting The Engine

Refer to your Briggs & Stratton Engine Manual for information on engine maintenance. The Engine manual provides detailed information and maintenance schedule.

1. Move the choke lever to the "CHOKE" position.

* Note: Not all models have this choke lever.

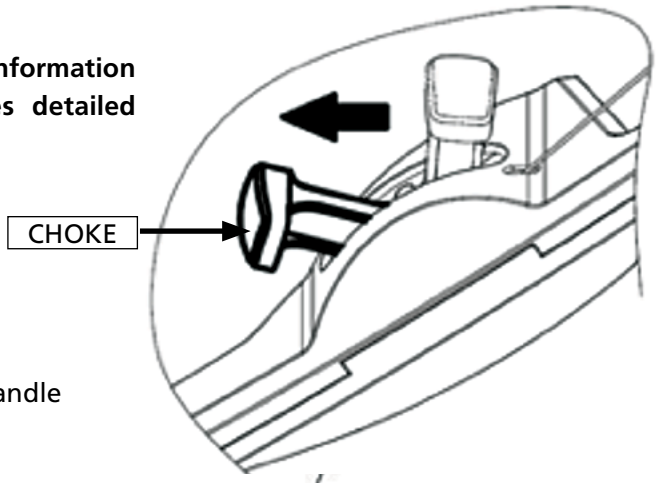

2. Pull back on the brake lever and hold it against the handle

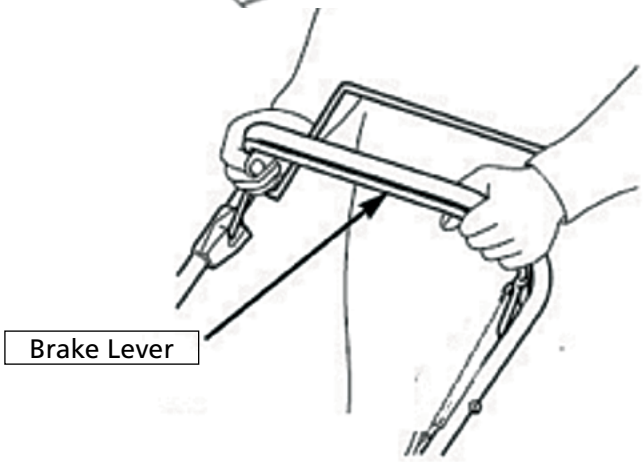

3. Release the clutch lever. This will prevent the Lawn Mower from moving forward when you operate the starter.

* Note: Not all models have this clutch lever.

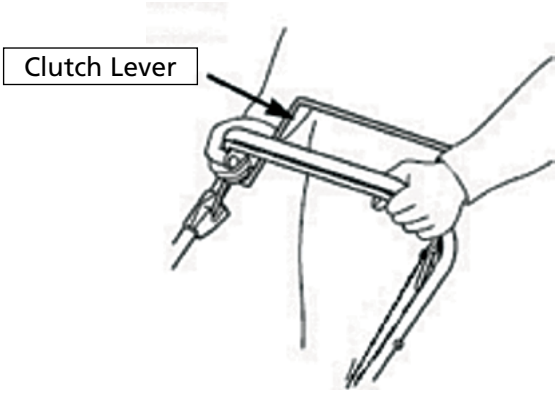

If the models have electric start function, please press the E-starting button lightly, the engine will be started.

* Note: Not all models have Electric Start Function.

4. With the starter handle in its support, take the starter handle with your right hand and pull slowly as far as to have a resistance, then pull energetically on the starter handle with starter rope through the support. (If the cold start is not sufficient enough, repeat this operation 2 or 3 times)

5. Immediately after the start, push back the choke lever from "CHOKE" position to "RUN" position.(If the temperature is low, allow the engine to run for a few minutes before starting to work.)

* Note: Not all models have this choke lever.

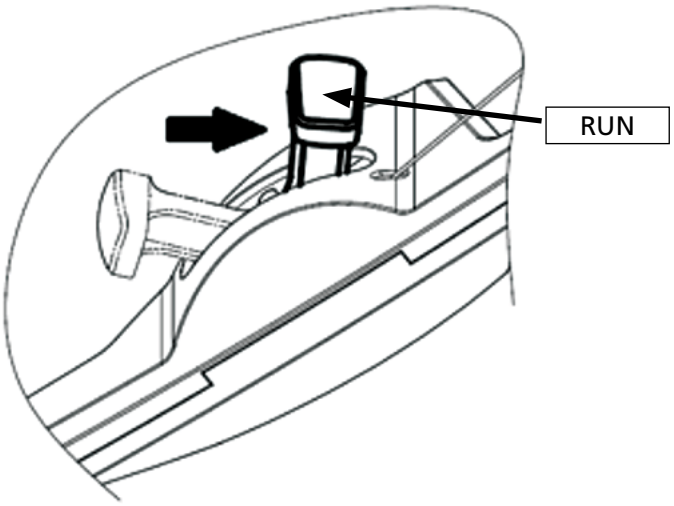

Operating the Controls for Mowing

Blade is in action as soon as engine is started. While the machine is working maintain the security handle in working position. The engine will stop as soon as you release the engine control bar.

Release the lever to stop the engine whenever you need to leave the Lawn Mower.

Clutch Lever

- Push the clutch lever forward and hold it against the handlebar to propel the Lawn Mower forward.
- Release the clutch lever to stop the Lawn Mower's forward movement.
- Always release the clutch lever before starting the engine. If the clutch is engaged, the Lawn Mower will move forward.
- Operate the clutch lever with a quick and complete motion, so the clutch is either fully engaged or fully released. Hold the clutch lever against the handlebar during self-propelled mowing. This will help to extend the service life of the clutch mechanism.

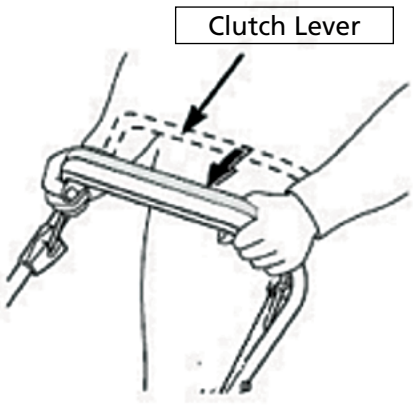

OPERATIONS

Throttle Lever

For best cut quality, always mow with the throttle lever in the "**FAST**" position. When the blade rotates at the preset fast speed, it creates a strong fan action that lifts and cuts grass more efficiently.

* Note: Not all models have this Throttle lever.

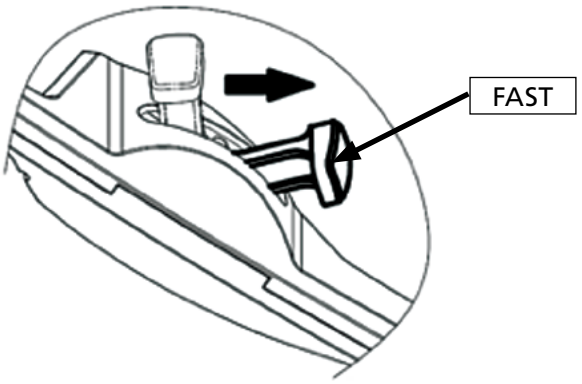

Stop Engine

1. Move the throttle lever to the "SLOW" position.

* Note: Not all models have this Throttle lever.

2. Release the clutch lever.
3. Release the brake lever.

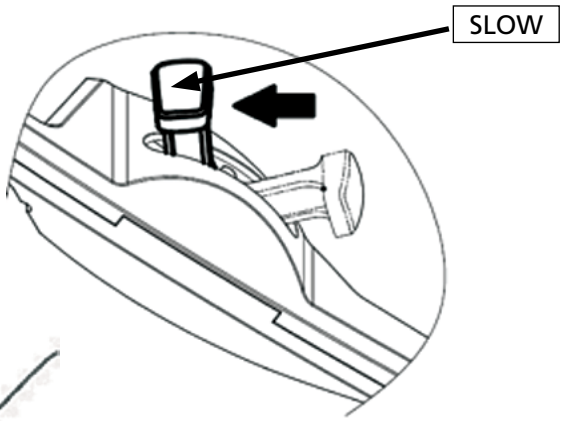

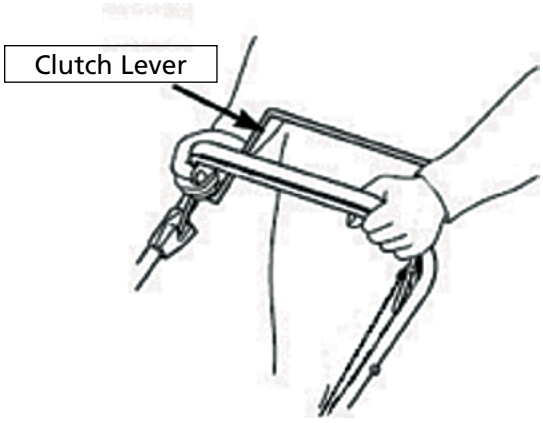

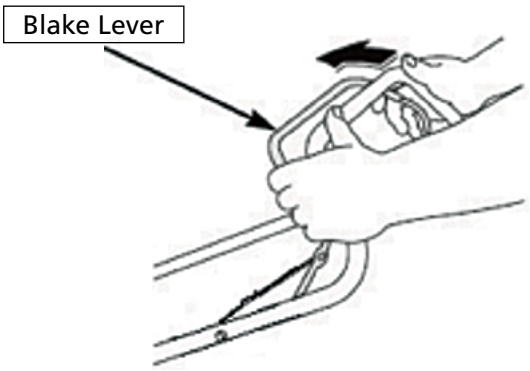

⚠ WARNING

The blade will continue to rotate for a few seconds after the engine has stopped. Disconnect the spark plug cap if the Lawn Mower is to be left unattended.

MAINTENANCE

Maintenance and Storage

⚠ IMPORTANT

Regular maintenance is essential for keeping the safety level and original performance of the machine.

- Make sure that all nuts, bolts and screws are kept well tightened to keep the Lawn Mower in a safe operating condition.
- **NEVER** store the Lawn Mower with petrol in the tank or in an enclosed area where petrol fumes could reach a strong heat source or a flame.
- Allow the engine to cool down before you store your Lawn Mower in a storage place.
- To reduce any risk of fire, keep the engine, exhaust silencer, battery compartment and fuel storage area free of grass, leaves, or excessive grease.
- Check frequently the condition of the deflector and the grass catcher, replace them if there is any damage.
- If the fuel tank has to be drained, this should be done outdoors and when the engine is cool.
- Wear thick gloves before mounting or sharpening the blade.
- Check blades often, in order to obtain clean work the blade should always be sharp and well balanced.
- Check regularly the oil level, add oil or replace it if necessary.
- Frequently check the Lawn Mower and make sure that all grass deposits are removed from beneath the deck.
- Lubricate regularly the wheel axle and the bearing with grease.
- If the blade hits violently an obstacle, stop the Lawn Mower and take your Lawn Mower to an authorized service centre.

Blade

- Tilt the Lawn Mower to the left, so the air cleaner side is up. This will help to prevent fuel leakage and hard starting.
- Inspect the blade for damage, cracks and excessive rust or corrosion.
- A dull blade can be sharpened, but a blade that is excessively worn, bent, cracked, or otherwise damaged must be replaced.
- A torque wrench must always be used when installing the blade.
- Check that the blade bolts are tight.

Removal and Installation

- If you remove the blade for sharpening or replacement, you will need a torque wrench for installation. Wear heavy gloves to protect your hands.
- Remove the bolt with a socket wrench. Use a wooden block to prevent the blade from turning when removing the bolt. Then remove the blade.
- Install the blade using the blade bolt and special washers. Be sure to install the special washers with the concave side toward the blade and the convex side toward the bolt.
- Tighten the blade bolt with a torque wrench. Use a wooden block to prevent the blade from turning when tightening the bolt.

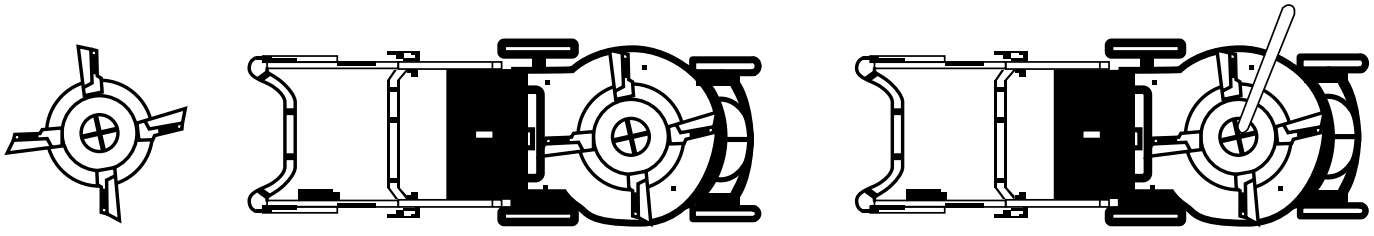

MAINTENANCE

⚠ WARNING

Use only original spare parts. Spare parts of bad quality can cause damages to your Lawn Mower and compromise your safety.

Grass Bag Cleaning and Replacement

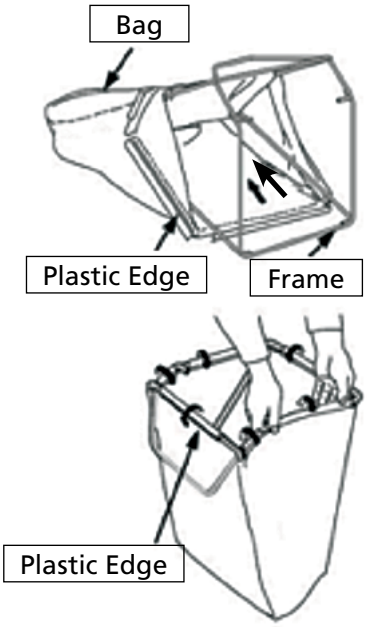

Cleaning

Wash the bag with a garden hose, and allow it to dry completely before use; a wet bag will clog quickly.

Replacement

1. Unclip the plastic edges of the bag from the frame, remove the frame from the bag.
2. Insert the frame into the bag, clip the plastic edges of the bag onto the frame.

Engine Maintenance

For full details engine maintenance refer to your Briggs & Stratton engine manual

MAINTENANCE

Maintenance Schedule

For a full maintenance schedule refer to Briggs & Stratton engine manual.

TROUBLESHOOTING

Engine will not start

PROBLEM	POSSIBLE CAUSE	REMEDY / ACTION
1. Check fuel.	Out of fuel.	Refuel.
	Bad fuel; engine stored without treating or draining petrol, or refuelled with bad petrol.	Drain the fuel tank and carburettor. Refuel with fresh petrol.
2. Remove and inspect spark plug.	Spark plug faulty, fouled, or improperly gapped.	Replace the spark plug.
	Spark plug wet with fuel (flooded engine).	Dry and reinstall spark plug.
3. Take engine to an authorized our servicing dealer, or refer to engine manual.	Fuel filter clogged, carburettor malfunction, ignition malfunction, valves stuck, etc.	Replace or repair faulty components as necessary.

Engine Lacks Power

PROBLEM	POSSIBLE CAUSE	REMEDY / ACTION
1. Check air cleaner.	Air cleaner elements clogged.	Clean or replace air cleaner elements.
2. Check fuel.	Bad fuel; engine stored without treating or draining petrol, or refuelled with bad petrol.	Drain the fuel tank and carburettor. Refuel with fresh petrol.
3. Take engine to an authorized or servicing dealer, or refer to engine manual.	Fuel filter clogged, carburettor malfunction, ignition malfunction, valves stuck, etc.	Replace or repair faulty components as necessary.

STORAGE

- The same petrol must not remain in the tank for more than one month due to fuel going stale.
- Thoroughly clean the Lawn Mower and store it indoors in a dry place.
- **NEVER** store the Lawn Mower with petrol in the tank or in an enclosed area where petrol fumes could reach a strong heat source or a flame.
- To reduce fire hazard, keep the engine, muffler, battery compartment and fuel storage area free of grass, leaves or excessive grease.
- If the fuel tank has to be drained, this should be done outdoors.
- Be careful during adjustment of the machine to prevent entrapment of the fingers between moving blade and fixed parts of the machine.
- Allow the product to cool for at least 30 minutes before storing.

SPECIFICATIONS

Model	BBT-LM-BSES-SP-4S
Rated power	3800 W
Displacement	161 CC
Rated speed	2750 RPM
Max torque	8 Nm
Cutting height range	20 - 55 mm
Number of cutting height adjustments	8
Cutting width	21 inches
Cutting height adjustment	Central height adjust
Wheels diameter (rear-front)	152 - 152 mm
Catcher volume	70 L
Weight	31.5 Kg
Sound pressure	88 dB(A)
Sound power	98 dB(A)
Quantity of strokes of work of the Engine	4
Type of engine cooling	Air cooling
Starting mode	Push Button Start
Drive system	Self Propelled
Fuel tank capacity	1.5 L
Max permitted slope	20 degrees

Technical Data subject to change without notice.

WARRANTY & SERVICE

Warranties

Bigger Boyz Toyz offer a 1-year parts warranty on all products used for domestic use from the date of purchase. For all commercial use, a 3-month parts warranty period applies, unless specified in the item listing. All conditions below are based upon the product being faulty or not performing as described. In the instance where a return is required, the purchaser is liable for any shipping cost. Warranties will only be determined by a Bigger Boyz Toyz Technician upon inspection.

Warranties do not cover accidents, misuse, neglect, natural disaster or act of God or other external causes, or damage caused by operating the equipment in a manner that is not described in the instructions.

Our products come with guarantees that cannot be excluded under the Australian Consumer Law. You are entitled to a replacement or refund for a major failure and for compensation for any other reasonably foreseeable loss or damage. You are also entitled to have the goods repaired or replaced if the goods fail to be of acceptable quality and the failure does not amount to a major failure.

Parts purchases, consumable components and accessories such as chains, carry bags, batteries, hoses, grinding discs, covers, belts, cable, wheels and blades are not covered by standard warranty.

Spare Parts

Spare parts are available. Please see our website (www.bbta.com.au) or contact us at bbt@bbta.com.au for more details.

EXPLODED DIAGRAM & PARTS LIST

NO	SKU	DESCRIPTION	QTY
1	SP-LM-BSES-SP-4S-001	Plastic Decoration	1
2	SP-LM-BSES-SP-4S-002	Clutch lever	1
3	SP-LM-BSES-SP-4S-003	Brake lever	1
4	SP-LM-BSES-SP-4S-004	Limiting Stopper	1
5	SP-LM-BSES-SP-4S-005	Plastic Decoration	1
6	SP-LM-BSES-SP-4S-006	Foam Pipe	1
7	SP-LM-BSES-SP-4S-007	Upper Handle	1
8	SP-LM-BSES-SP-4S-008	Cable Fixing Clamp	1
9	SP-LM-BSES-SP-4S-009	Brake cable	1
10	SP-LM-BSES-SP-4S-010	Clutch cable	1

NO	SKU	DESCRIPTION	QTY
11	SP-LM-BSES-SP-4S-011	Lower handrail	1
12	SP-LM-BSES-SP-4S-012	Bolt	4
13	SP-LM-BSES-SP-4S-013	Flat Washer	4
14	SP-LM-BSES-SP-4S-014	Knob	4
15	SP-LM-BSES-SP-4S-015	Rope Guide	1
16	SP-LM-BSES-SP-4S-016	Nut	1
17	SP-LM-BSES-SP-4S-017	Cable Support	2
18	SP-LM-BSES-SP-4S-018	Bolt	2
19	SP-LM-BSES-SP-4S-019	Nut	2
20	SP-LM-BSES-SP-4S-020	Handle Plug	2

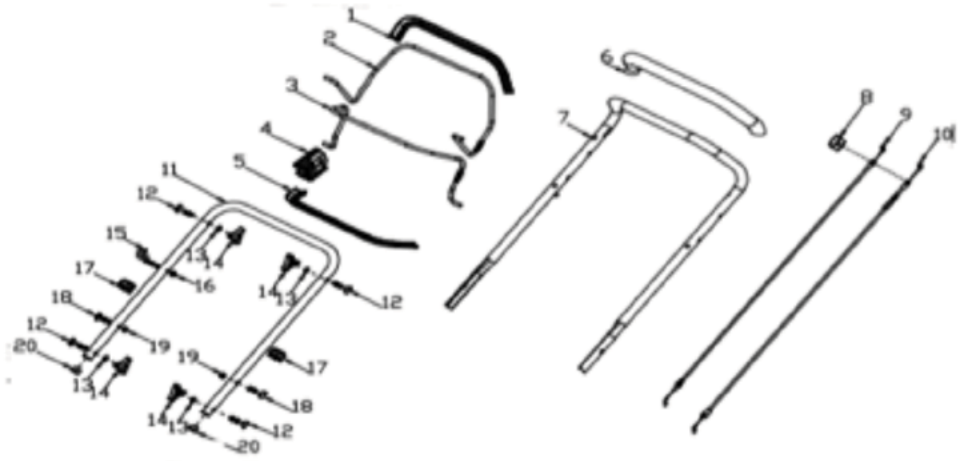

NO	SKU	DESCRIPTION	QTY
1	SP-LM-BSES-SP-4S-001.1	Upper Cover of Left Panel	1
2	SP-LM-BSES-SP-4S-002.1	Screw	2
3	SP-LM-BSES-SP-4S-003.1	Spring	1
4	SP-LM-BSES-SP-4S-004.1	Handle	1
5	SP-LM-BSES-SP-4S-005.1	Cable	1
6	SP-LM-BSES-SP-4S-006.1	Nut	6
7	SP-LM-BSES-SP-4S-007.1	Fixed plate assy	1
8	SP-LM-BSES-SP-4S-008.1	Bolt	2
9	SP-LM-BSES-SP-4S-009.1	Bolt	2
10	SP-LM-BSES-SP-4S-010.1	Lower Cover of Left Panel	1
11	SP-LM-BSES-SP-4S-011.1	Screw	6
12	SP-LM-BSES-SP-4S-012.1	Screw	6
13	SP-LM-BSES-SP-4S-013.1	Handle panel	1
14	SP-LM-BSES-SP-4S-014.1	Upper Cover of Right Panel	1
15	SP-LM-BSES-SP-4S-015.1	Bush	1

NO	SKU	DESCRIPTION	QTY
16	SP-LM-BSES-SP-4S-016.1	Fixed Plate	1
17	SP-LM-BSES-SP-4S-017.1	Variable speed lever	1
18	SP-LM-BSES-SP-4S-018.1	Handle Assy	1
19	SP-LM-BSES-SP-4S-019.1	Spring	1
20	SP-LM-BSES-SP-4S-020.1	Key	2
21	SP-LM-BSES-SP-4S-021.1	Key Holder	1
22	SP-LM-BSES-SP-4S-022.1	Screw	1
23	SP-LM-BSES-SP-4S-023.1	Button	1
24	SP-LM-BSES-SP-4S-024.1	Cable Holder	1
25	SP-LM-BSES-SP-4S-025.1	Cable	1
26	SP-LM-BSES-SP-4S-026.1	Lower cover of right panel	1
27	SP-LM-BSES-SP-4S-027.1	Wire harness	1

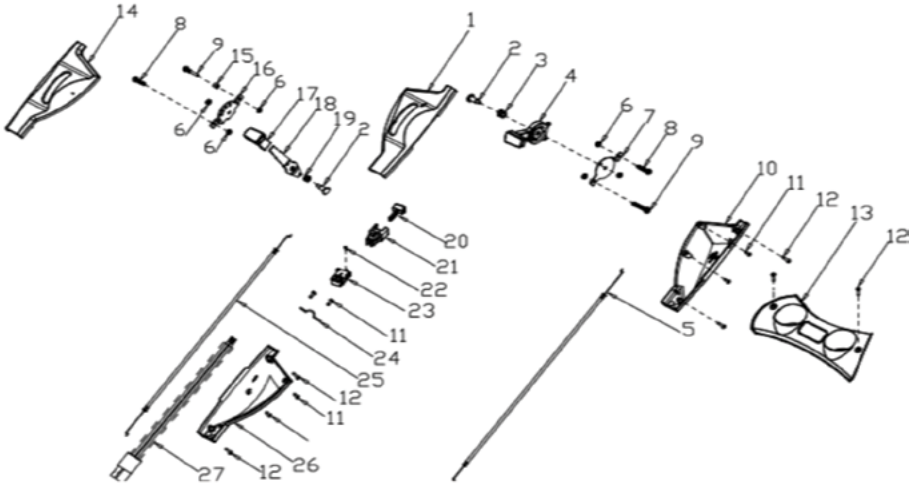

EXPLODED DIAGRAM & PARTS LIST

NO	SKU	DESCRIPTION	QTY
1	SP-LM-BSES-SP-4S-001.2	Engine	1
2	SP-LM-BSES-SP-4S-002.2	Bolt	3
3	SP-LM-BSES-SP-4S-003.2	Flat Key	1
4	SP-LM-BSES-SP-4S-004.2	Blade Adapter	1
5	SP-LM-BSES-SP-4S-005.2	Screw Cap	2
6	SP-LM-BSES-SP-4S-006.2	Belt cover	1
7	SP-LM-BSES-SP-4S-007.2	Screw	2
8	SP-LM-BSES-SP-4S-008.2	Belt Cover Plate1	1
9	SP-LM-BSES-SP-4S-009.2	Belt Cover Plate2	1
10	SP-LM-BSES-SP-4S-010.2	Screw	2
11	SP-LM-BSES-SP-4S-011.2	Blade Disk, Blade, Bolt,Spring, Flat Washer, Nut	1
12	SP-LM-BSES-SP-4S-012.2	Blade Washer	1
13	SP-LM-BSES-SP-4S-013.2	Blade Bolt	1

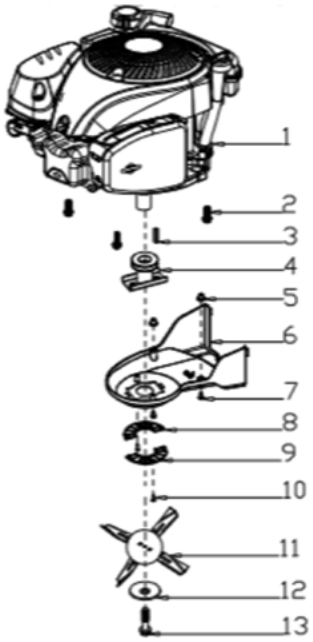

NO	SKU	DESCRIPTION	QTY
1	SP-LM-BSES-SP-4S-001.3	Bolt	4
2	SP-LM-BSES-SP-4S-002.3	Height Adjustment Plate	1
3	SP-LM-BSES-SP-4S-003.3	Right Bracket	1
4	SP-LM-BSES-SP-4S-004.3	Nut	4
5	SP-LM-BSES-SP-4S-005.3	Deck	1
6	SP-LM-BSES-SP-4S-006.3	Mulching plug	1
7	SP-LM-BSES-SP-4S-007.3	Cable Sleeve	1
8	SP-LM-BSES-SP-4S-008.3	Seal Ring	1
9	SP-LM-BSES-SP-4S-009.3	Seal Ring	1
10	SP-LM-BSES-SP-4S-010.3	Screw	7
11	SP-LM-BSES-SP-4S-011.3	Left Bracket	1
12	SP-LM-BSES-SP-4S-012.3	Rear Cover Support	2
13	SP-LM-BSES-SP-4S-013.3	Bolt	3
14	SP-LM-BSES-SP-4S-014.3	Pedestal	1
15	SP-LM-BSES-SP-4S-015.3	Nut	3
16	SP-LM-BSES-SP-4S-016.3	Plug	2
17	SP-LM-BSES-SP-4S-017.3	Rear Cover	1
18	SP-LM-BSES-SP-4S-018.3	Rear Cover Spring	1
19	SP-LM-BSES-SP-4S-019.3	Rear Cover Shaft	1

NO	SKU	DESCRIPTION	QTY
20	SP-LM-BSES-SP-4S-020.3	C front handle	1
21	SP-LM-BSES-SP-4S-021.3	C front parts	1
22	SP-LM-BSES-SP-4S-022.3	Washer L	1
23	SP-LM-BSES-SP-4S-023.3	Washer R	1
24	SP-LM-BSES-SP-4S-024.3	Nut	2
25	SP-LM-BSES-SP-4S-025.3	Side Discharge Bracket	1
26	SP-LM-BSES-SP-4S-026.3	Bolt	2
27	SP-LM-BSES-SP-4S-027.3	Side Discharge Cover Shaft	1
28	SP-LM-BSES-SP-4S-028.3	Side Discharge Cover Spring	1
29	SP-LM-BSES-SP-4S-029.3	Screw	4
30	SP-LM-BSES-SP-4S-030.3	Cover Plate	1
31	SP-LM-BSES-SP-4S-031.3	Spring	1
32	SP-LM-BSES-SP-4S-032.3	Side Discharge Cover	1
33	SP-LM-BSES-SP-4S-033.3	Lock	1
34	SP-LM-BSES-SP-4S-034.3	Side-Discharge Guiding Board	1
35	SP-LM-BSES-SP-4S-035.3	Service Window cover	1
36	SP-LM-BSES-SP-4S-036.3	Charger (AU)	1
37	SP-LM-BSES-SP-4S-037.3	Lithium battery package(BS750EX)	1

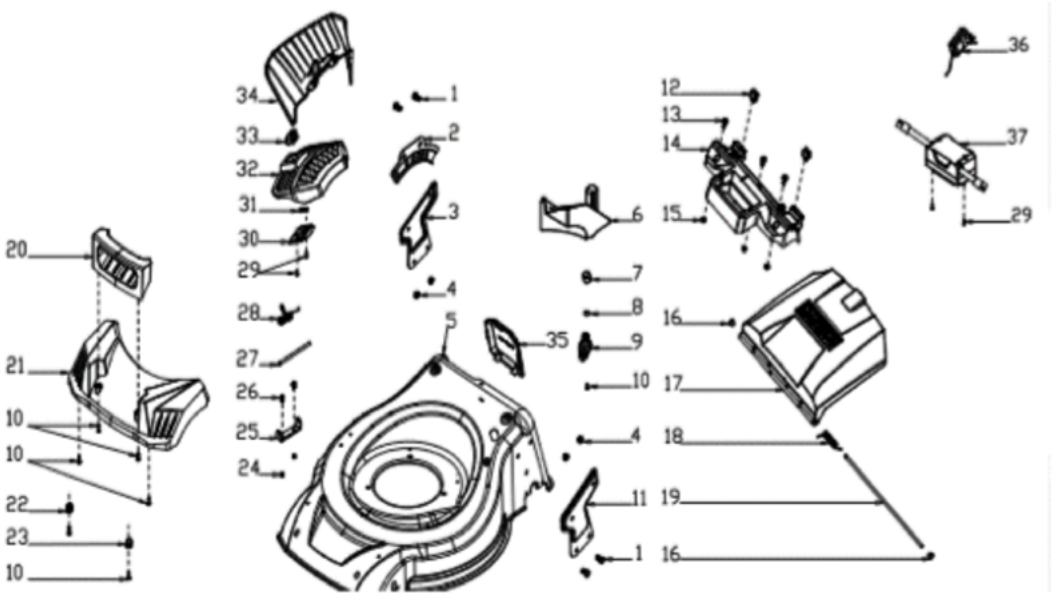

EXPLODED DIAGRAM & PARTS LIST

NO	SKU	DESCRIPTION	QTY
1	SP-LM-BSES-SP-4S-001.4	Height Adjustment Handle	1
2	SP-LM-BSES-SP-4S-002.4	Rear Wheel Shaft Assy	1
3	SP-LM-BSES-SP-4S-003.4	11" inner wheel cover	2
4	SP-LM-BSES-SP-4S-004.4	Spring Washer	4
5	SP-LM-BSES-SP-4S-005.4	Bolt	2
6	SP-LM-BSES-SP-4S-006.4	Ball Bearing	4
7	SP-LM-BSES-SP-4S-007.4	11" wheel	2
8	SP-LM-BSES-SP-4S-008.4	Flat Washer	2
9	SP-LM-BSES-SP-4S-009.4	Nut	4
10	SP-LM-BSES-SP-4S-010.4	11" outer wheel cover	2
11	SP-LM-BSES-SP-4S-011.4	Split Pin	1
12	SP-LM-BSES-SP-4S-012.4	Belt	1
13	SP-LM-BSES-SP-4S-013.4	Gearbox	1
14	SP-LM-BSES-SP-4S-014.4	Fixing plate	1
15	SP-LM-BSES-SP-4S-015.4	Pin	2
16	SP-LM-BSES-SP-4S-016.4	Nut	5
17	SP-LM-BSES-SP-4S-017.4	Shaft Sleeve, Ball bearing	2
18	SP-LM-BSES-SP-4S-018.4	Bolt	4
19	SP-LM-BSES-SP-4S-019.4	Lock Ring	4
20	SP-LM-BSES-SP-4S-020.4	Flat Washer	2
21	SP-LM-BSES-SP-4S-021.4	Left Gear	1
22	SP-LM-BSES-SP-4S-022.4	Right Gear	1
23	SP-LM-BSES-SP-4S-023.4	Front Wheel Shaft	1
24	SP-LM-BSES-SP-4S-024.4	Nut	5

NO	SKU	DESCRIPTION	QTY
25	SP-LM-BSES-SP-4S-025.4	Bolt	5
26	SP-LM-BSES-SP-4S-026.4	Nut	1
27	SP-LM-BSES-SP-4S-027.4	Bearing	4
28	SP-LM-BSES-SP-4S-028.4	8"wheel	2
29	SP-LM-BSES-SP-4S-029.4	8" outer wheel cover	2
30	SP-LM-BSES-SP-4S-030.4	Height Adjustment Spring	1
31	SP-LM-BSES-SP-4S-031.4	Height Adjustment Connecting Rod	1
32	SP-LM-BSES-SP-4S-032.4	Bolt	1
33	SP-LM-BSES-SP-4S-033.4	Flat Washer	1
34	SP-LM-BSES-SP-4S-034.4	Spring	1
35	SP-LM-BSES-SP-4S-035.4	Upper belt wheel	1
36	SP-LM-BSES-SP-4S-036.4	Lower Belt wheel	1
37	SP-LM-BSES-SP-4S-037.4	Nut	4
38	SP-LM-BSES-SP-4S-038.4	Spring	1
39	SP-LM-BSES-SP-4S-039.4	Plate assy	1
40	SP-LM-BSES-SP-4S-040.4	Idle pulley Assy	1
41	SP-LM-BSES-SP-4S-041.4	Bolt	2
42	SP-LM-BSES-SP-4S-042.4	Idle pulley	2
43	SP-LM-BSES-SP-4S-043.4	Bearing	3
44	SP-LM-BSES-SP-4S-044.4	Bolt	1
45	SP-LM-BSES-SP-4S-045.4	Bolt	1
46	SP-LM-BSES-SP-4S-046.4	Shaft Sleeve	4
47	SP-LM-BSES-SP-4S-047.4	Front axle bush	2

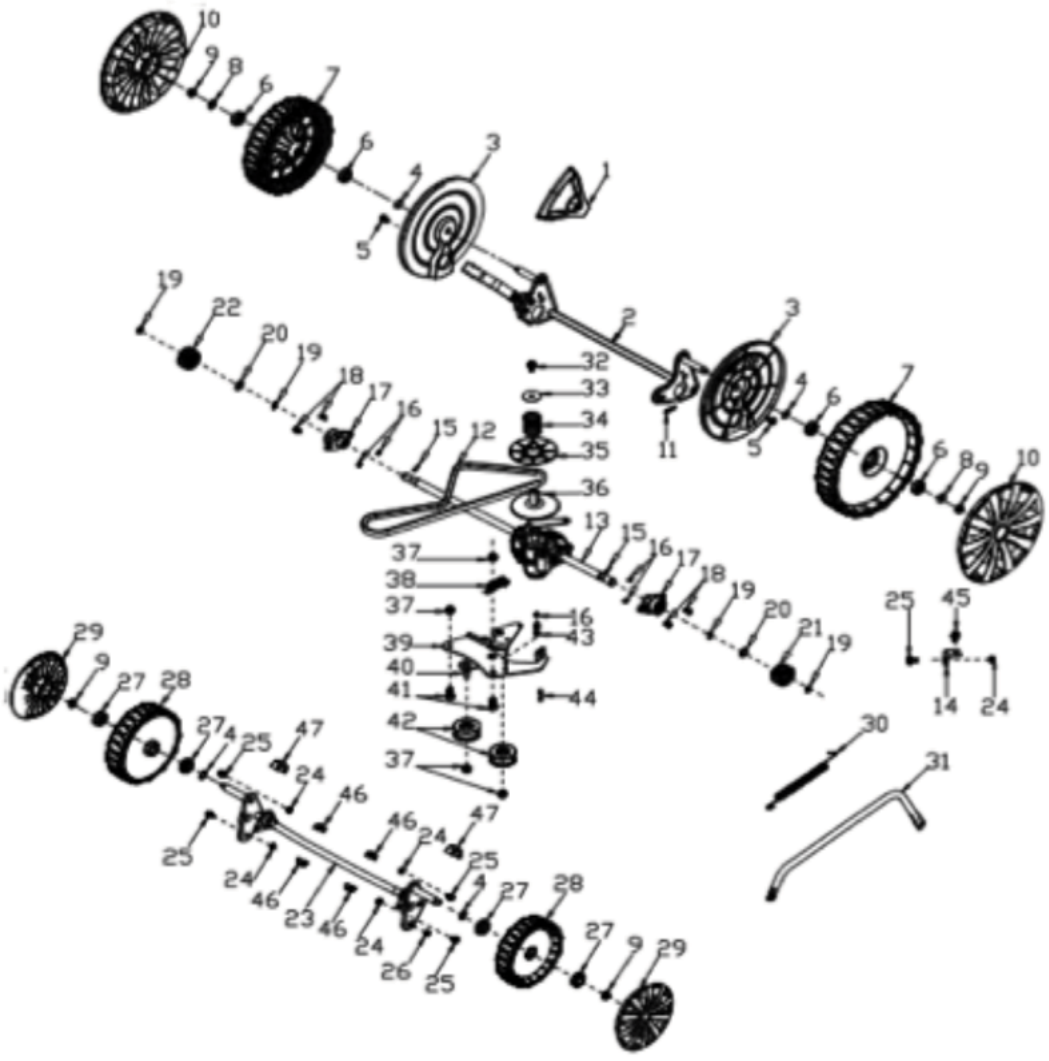

EXPLODED DIAGRAM & PARTS LIST

NO	SKU	DESCRIPTION	QTY
1	SP-LM-BSES-SP-4S-001.5	Metal Bracket	1
2	SP-LM-BSES-SP-4S-002.5	Flat Washer	2
3	SP-LM-BSES-SP-4S-003.5	Screw	4
4	SP-LM-BSES-SP-4S-004.5	Fixed plate	2
5	SP-LM-BSES-SP-4S-005.5	Plastic Cover	1

NO	SKU	DESCRIPTION	QTY
6	SP-LM-BSES-SP-4S-006.5	Cover Plate	1
7	SP-LM-BSES-SP-4S-007.5	Hand Decoration Cover	1
8	SP-LM-BSES-SP-4S-008.5	Indicated Board	1
9	SP-LM-BSES-SP-4S-009.5	Fabric bag	1

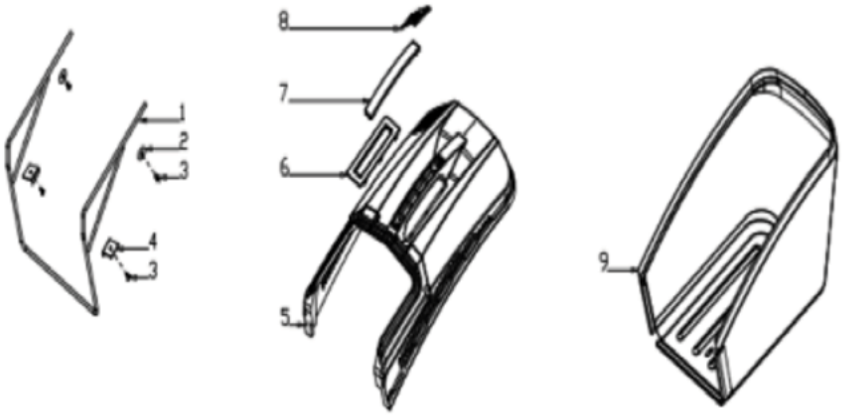

YOU MAY ALSO LIKE

Chainsaws

Cultivators / Tillers

Log Splitters

Mulcher

Enquiry or problems with our products?

CALL US (02) 4257 4787

www.bbta.com.au

COPYRIGHT © BIGGER BOYZ TOYZ AUSTRALIA PTY.LTD.
Unit 2/3 Delta Place, Albion Park Rail NSW 2527
BBT-LM-BSES-SP-4S-MNL1905